Fits Shaft Diameter: 1.375"
NEMA FRAME
213 T
215 T

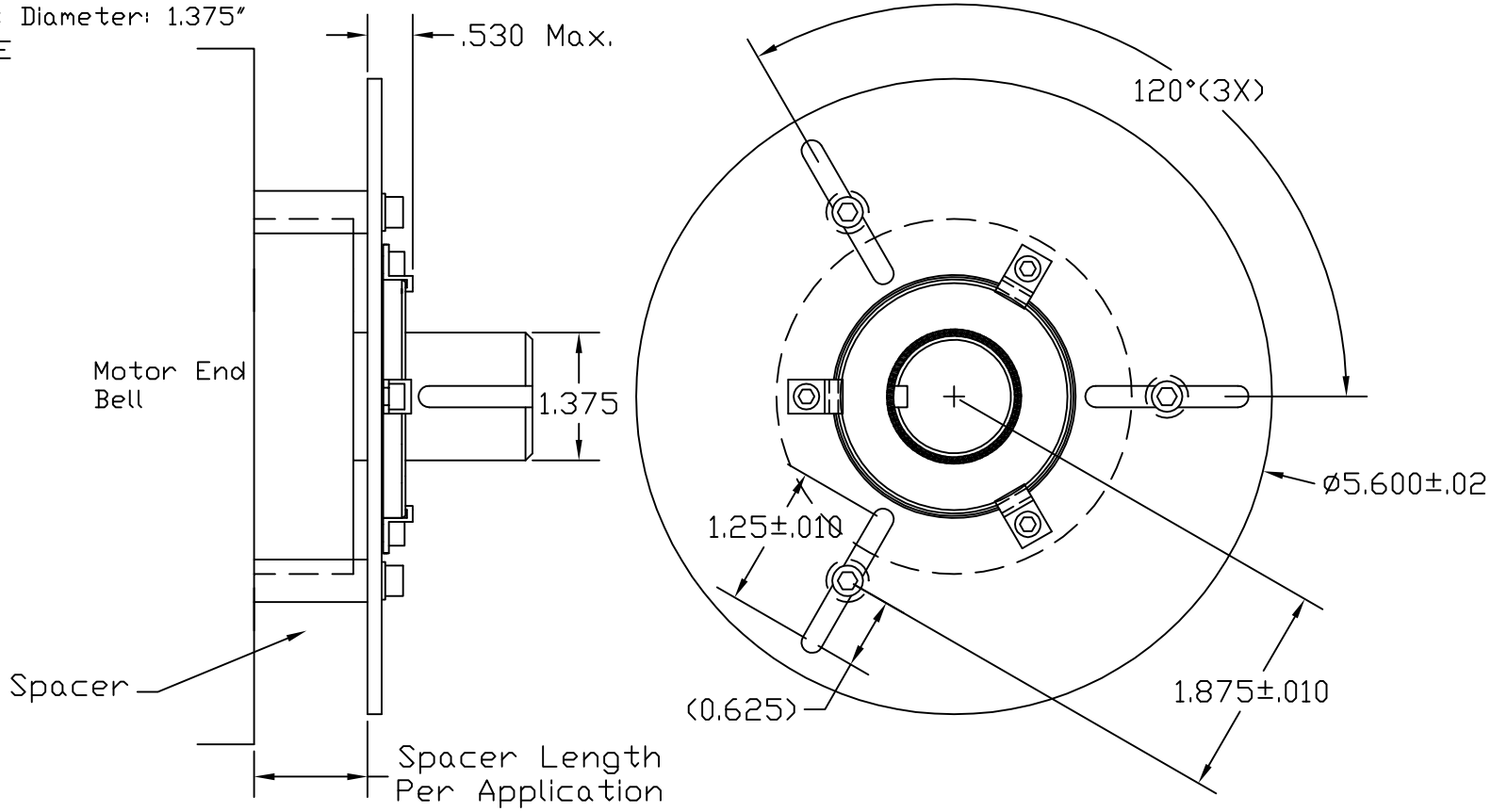

Mounting Plate: Aluminum

Flat Washers: #8 SAE Zinc- Plated Steel (rust resistant)

Lock Washer: #8 medium Steel Split-plain steel

Screws: 8-32 Socket Head Cap Screws-Alloy Steel

Spacer: 3/8" OD #8 Screw Clearance -Aluminum Unthreaded Round Spacer

THEREIN, ARE THE EXCLUSIVE PROPERTY OF ELECTRO STATIC TECHNOLOGY ISSUED IN STRICT CONFIDENCE AND SHALL NOT WITHOUT CONSENT, BE REPRODUCED, COPIED OR USED FOR ANY PURPOSE WHATSOEVER, EXCEPT BUSINESS WITH E.S.T.

UNLESS OTHERWISE SPECIFIED
DIMENSIONS ARE IN.
MILLIMETERS ☐
INCHES ☒
UNTOLERANCED DIMENSIONS

OVER	TO	TOLERANCE

DATE: 4/18/07
ENGINEER: J. Richardson

ELECTRO STATIC TECHNOLOGY
AN ITW COMPANY
31 WINTERBROOK ROAD, MECHANIC FALLS, MAINE 04256
PHONE (207)998-5140 FAX (207)998-5143

AEGIS NEMA SHAFT GROUNDING KIT

DWG NO. SGR-1.375-NEMA
Rev. *B

US Patent No 7,136,271 & 7,193,836 Other patents pending