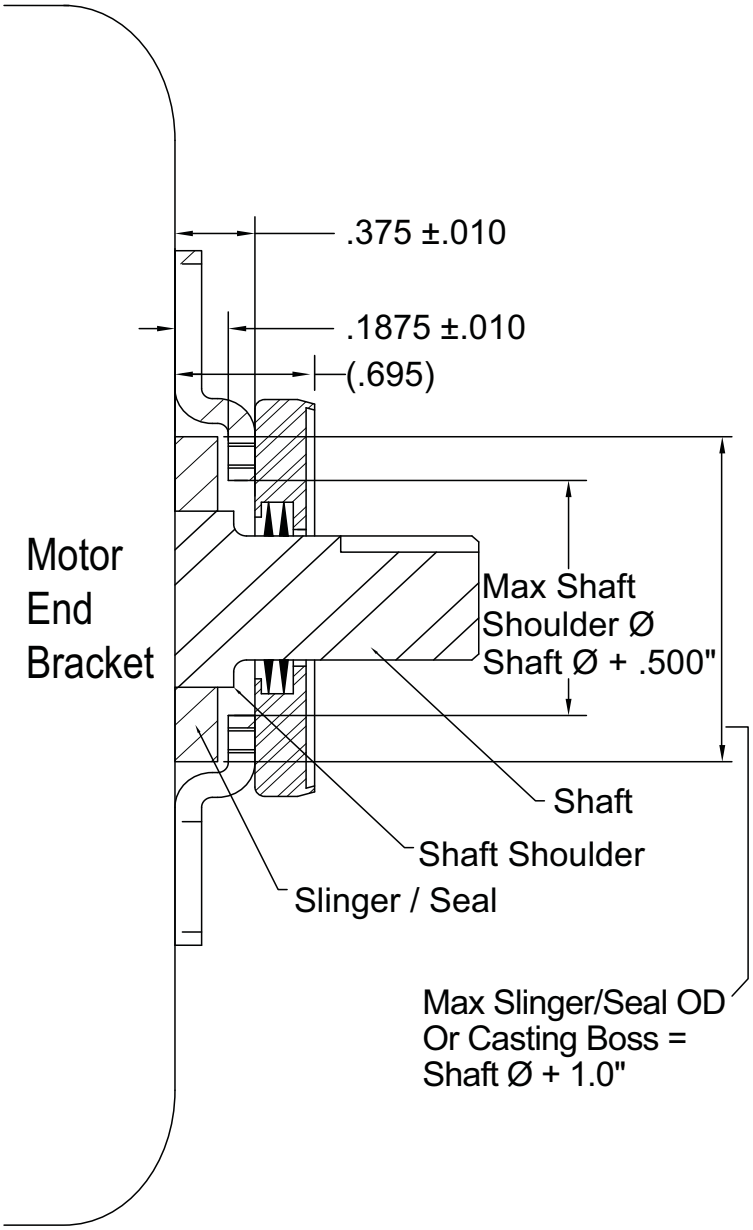

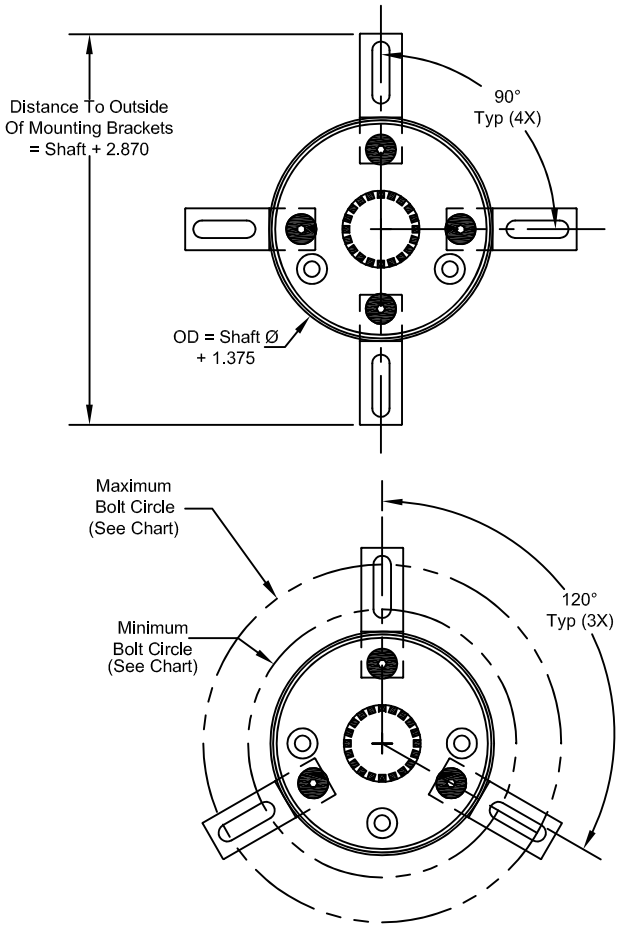

AEGIS® SGR
BEARING PROTECTION RING

Patented Technology
www.est-aegis.com

Bolt Circle for NEMA motors

Shaft	Universal Bracket	
	MIN	MAX
0.625"	2.400"	3.200"
0.875"	2.650"	3.450"
1.125"	2.900"	3.700"
1.375"	3.150"	3.950"
1.625"	3.400"	4.200"
1.875"	3.650"	4.450"
2.125"	3.900"	4.700"
2.375"	4.150"	4.950"
2.875"	4.650"	5.450"
3.375"	5.150"	5.950"
3.625"	5.400"	6.200"
3.875"	5.650"	6.450"
4.375"	6.150"	6.950"
4.875"	6.650"	7.450"

Form 2700-1 3/1/2012 Bracket Style with bolt circle
EST-ITW Copyright © 2012

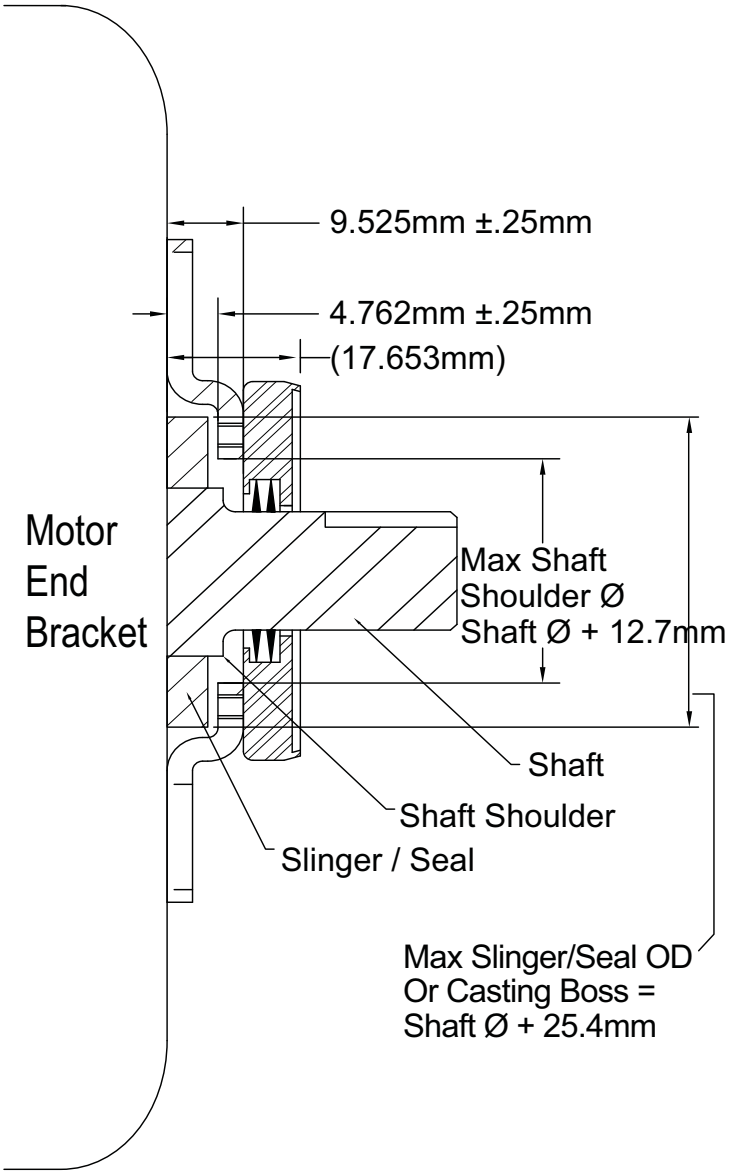

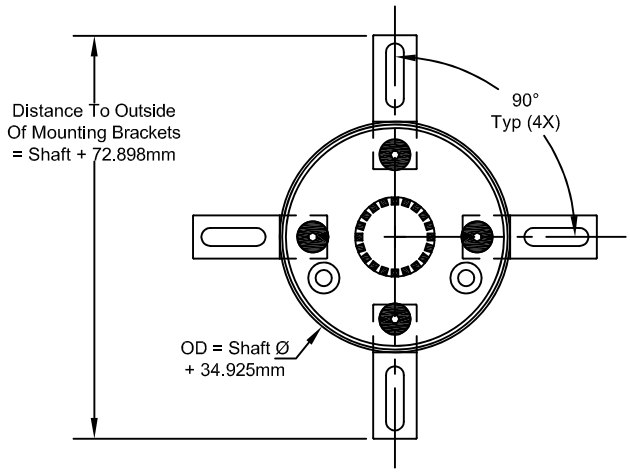

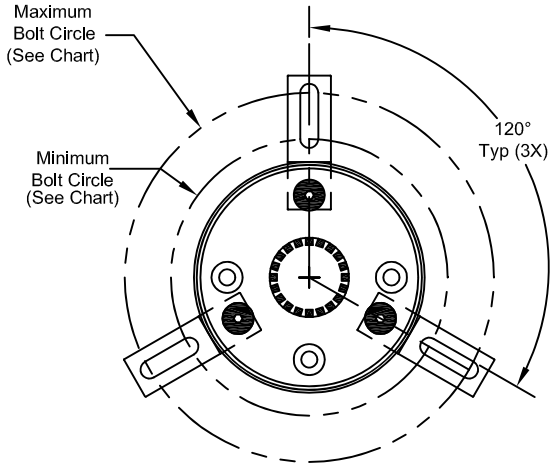

AEGIS® SGR
BEARING PROTECTION RING

Patented Technology
www.est-aegis.com

Bolt Circle for IEC motors

Shaft	Universal Bracket	
	MIN	MAX
28	74mm	93mm
38	84mm	103mm
42	88mm	107mm
48	94mm	113mm
55	101mm	120mm
60	106mm	125mm
65	111mm	130mm
70	116mm	135mm
75	121mm	140mm
80	126mm	145mm
85	131mm	150mm
90	136mm	155mm
95	141mm	160mm

Form 2700-1m 3/1/2012 Bracket Style with bolt circle
EST-ITW Copyright © 2012